Red Rapids

SigFPGA™ RX2 12/1600

Model 376

PCIe

XMC

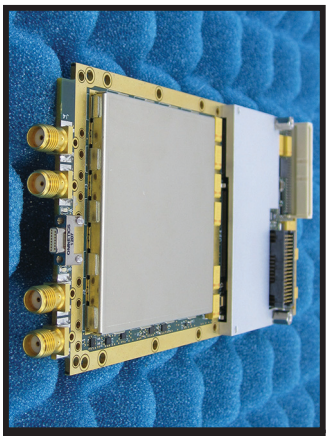

CCXMC

VPX

The SigFPGA™ product family provides the ideal platform to rapidly field application specific signal acquisition and generation functions minus the expense of custom hardware development. All of the products share a common FPGA processing architecture and code base with different interface options tailored to a variety of market needs.

The Model 376 is designed around the Texas Instruments AD12D1600 12-bit dual ADC. The 1.6 GHz sample clock is supplied by either the on-board frequency synthesizer or an external source. The frequency synthesizer can be phase locked to the local 10 MHz TCXO or an external reference can be used to achieve system-wide phase coherence.

Adopting open architecture hardware and software standards allows SigFPGA™ products to seamlessly transition from the desktop to embedded platforms.

Typical Applications

Spectrum monitor	Test & measurement
Radar & comms	Acqusition & telemetry
Signal recorder	Medical diagnostics
Software defined radio	DSP accelerator

Two AC or DC coupled 12-bit ADC channels

Three Xilinx Kintex-7 FPGA size options

Two banks of optional QDR II+ SRAM

Internal or external sample clock (≤ 1.6 GHz)

Phase locked frequency synthesizer

Internal or external 10 MHz reference

Temperature and power supply monitors

PCI Express (PCIe) x8 or x4 host bus

High performance scatter-gather DMA

Front and rear auxiliary connectors

Configuration flash loads from JTAG or host

FPGA VHDL core library for data interfaces

FPGA VHDL reference design with source

Demostration software (C) with source

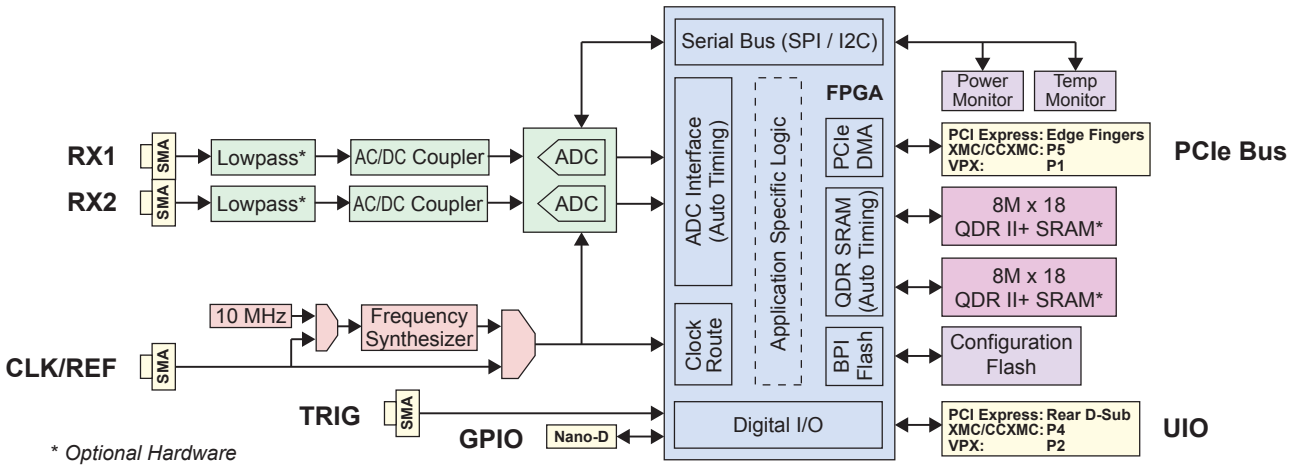

* *Optional Hardware*

Form Factor

PCI Express (air cooled)	PCI Express 2.1, standard height, half-length, x8 or x4 physical edge connector
XMC (air cooled)	ANSI/VITA 42.0 single-width, ANSI/VITA 42.3
CCXMC (conduction cooled)	XMC plus ANSI/VITA 20
VPX (air or conduction cooled)	3U Eurocard, VITA 65, front panel I/O

FPGA Selection

Device	Xilinx Kintex-7
Size	XC7K160T, XC7K325T, or XC7K410T
Speed/Temperature Grade	-2I (Industrial) or -3E (Extended)

Optional SRAM

Technology	QDR II+ 8M x 18 b4
Performance	1.8 GB/s simultaneous r/w per bank
Capacity	32 MB across two banks of 16 MB

Digital I/O

PCI Express Bus on Edge Fingers (PCI Express), P5 (XMC/CCXMC), P1 (VPX)	x8 or x4 electrical, Gen 2 backward compatible with Gen 1 and upward comaptible with Gen 3
General Purpose I/O (GPIO) on 15-pin Nano-D	6-bit LVTTL (3.3V), plus single 50 Ω or Hi-Z terminated LVTTL (3.3V / 5V tolerant) trigger
User I/O (UIO) on 68-pin D-Sub (PCI Express), P4 (XMC/CCXMC), P2 (VPX)	48-bit LVTTL (3.3V or 2.5V) or 24-bit LVDS, plus 12-bit LVTTL (3.3V or 2.5V), plus 2-bit LVTTL (voltage determined by 48-bit selection)
Trigger (TRIG) on SMA	50 Ω, (3.3V / 5V tolerant) LVTTL

Analog I/O

Receiver (RX) on SMA	50 Ω, ADC input
Clock/Reference (CLK/REF) on SMA	50 Ω, external sample clock or 10 MHz reference to internal sample clock

Power [1] (No SRAM / 32MB SRAM)

PCI Express [2]	12V = 10.8W / 16.5W AC Coupled: 3.3V = 172mW DC Coupled: 3.3V = 733mW
XMC or CCXMC [2]	12V = 2.6W, VPWR = 8.3W / 13.9W AC Coupled: 3.3V = 172mW DC Coupled: 3.3V = 733mW
VPX [2]	12V = 10.8W / 16.5W AC Coupled: 3.3V = 172mW DC Coupled: 3.3V = 733mW

Environmental [3]

Storage Temperature	-55 °C to 125 °C
Operating Ambient Temperature	-30 °C to 85 °C
Typical Air Flow [4]	150 LFM
Max Heat Sink Temperature	95 °C

Software

Driver (32-bit or 64-bit)	Windows 7/8/10, Linux
API & Demonstration Code	C (C++ compatible)

Typical Performance Characteristics

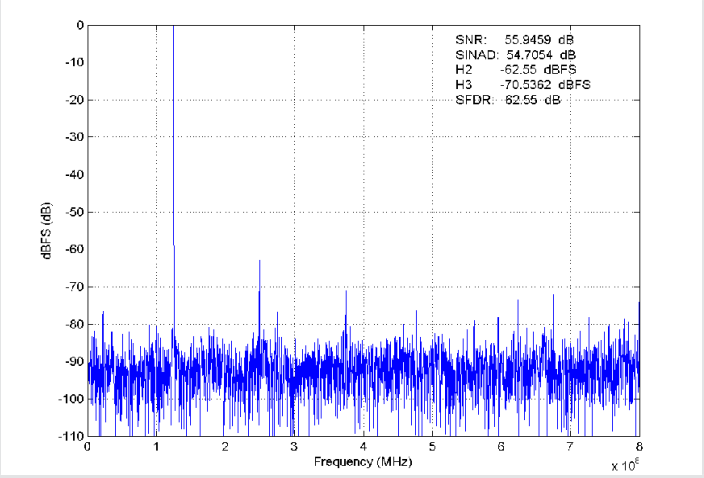

Receiver (RX) Performance (AC / DC Coupled)

1 dB Passband	10 to 1000 MHz / DC to 1000 MHz
3 dB Passband	0.1 to 2500 MHz / DC to 1100 MHz
Full Scale Input Amplitude (500 MHz Input)	2.9 dBm (0.88 Vpp) / 2.1 dBm (0.81 Vpp)
SNR (124.8 MHz Input)	56.0 dB / 52.6 dB
SINAD (124.8 MHz Input)	54.7 dB / 52.4 dB
SFDR (124.8 MHz Input)	66 dBc / 62.5 dBc
Channel Isolation (500 MHz)	58 dB / 47 dB
Optional Lowpass Filter	5-pole Butterworth or Chebychev

Clock/Reference (CLK/REF) Performance

Clock Frequency (Fs) Range	150 to 1600 MHz
Internal Clock Phase Noise	-100 dBc/Hz (10 kHz offset)
Internal Reference Accuracy	10 MHz +/- 1 ppm
External Clock Amplitude	4 dBm (1.0 Vpp) to 13 dBm (2.8 Vpp)
External Reference Amplitude	7 dBm (1.5 Vpp) to 14.8 dBm (3.5 Vpp)

Single Piece Price [5]

XC7K160T-2I	$6,990 (No SRAM) / $7,990 (32 MB SRAM)
XC7K325T-2I	$7,790 (No SRAM) / $8,790 (32 MB SRAM)
XC7K410T-2I	$8,590 (No SRAM) / $9,590 (32 MB SRAM)
XC7K160T-3E	$7,290 (No SRAM) / $8,290 (32 MB SRAM)
XC7K325T-3E	$8,290 (No SRAM) / $9,290 (32 MB SRAM)
XC7K410T-3E	$9,290 (No SRAM) / $9,990 (32 MB SRAM)

Contact Information

Address	Red Rapids 797 N Grove Rd, Suite 101 Richardson, TX 75081
Phone	972-671-9570 (+1 country code)
Website	www.redrapids.com
E-mail	sales@redrapids.com

[1] Voltage monitors attached to the primary supply inputs provide measurements accessible through the software API.
[2] Voltages that do not supply power are omitted. Values do not include power consumed by the application specific FPGA logic. FPGA power is drawn from the VPWR source on XMC/CCXMC units and 12V on all others. FPGA logic power will incur a 10% efficiency loss through voltage converters.
[3] Temperature monitors distributed across the board provide measurements accessible through the software API.
[4] Required air flow will depend on the power consumed by the application specific FPGA logic.
[5] Prices shown for PCI Express, XMC, and CCXMC form factors; add $2,000 for the VPX form factor.